□□□
□□□□□□□ □□□□□ □□□□□□□□

Keystroke function: 14 buttons, including 10 number keystroke and 4 letter keystroke.

Special key—button “C”, eliminate misinput, easily use.

Numeral key—choose 4-7buttons to set the password in 13 keystroke except button “C”.

Change code function: basic on the customers’ need , one should change password, 7buttons most one time, but not overlap.

Security function: exactitude design, preciseness structure, mechanism motion. with strict trial ,it can still work normally after 50000 times opening,Possess security and secrecy.

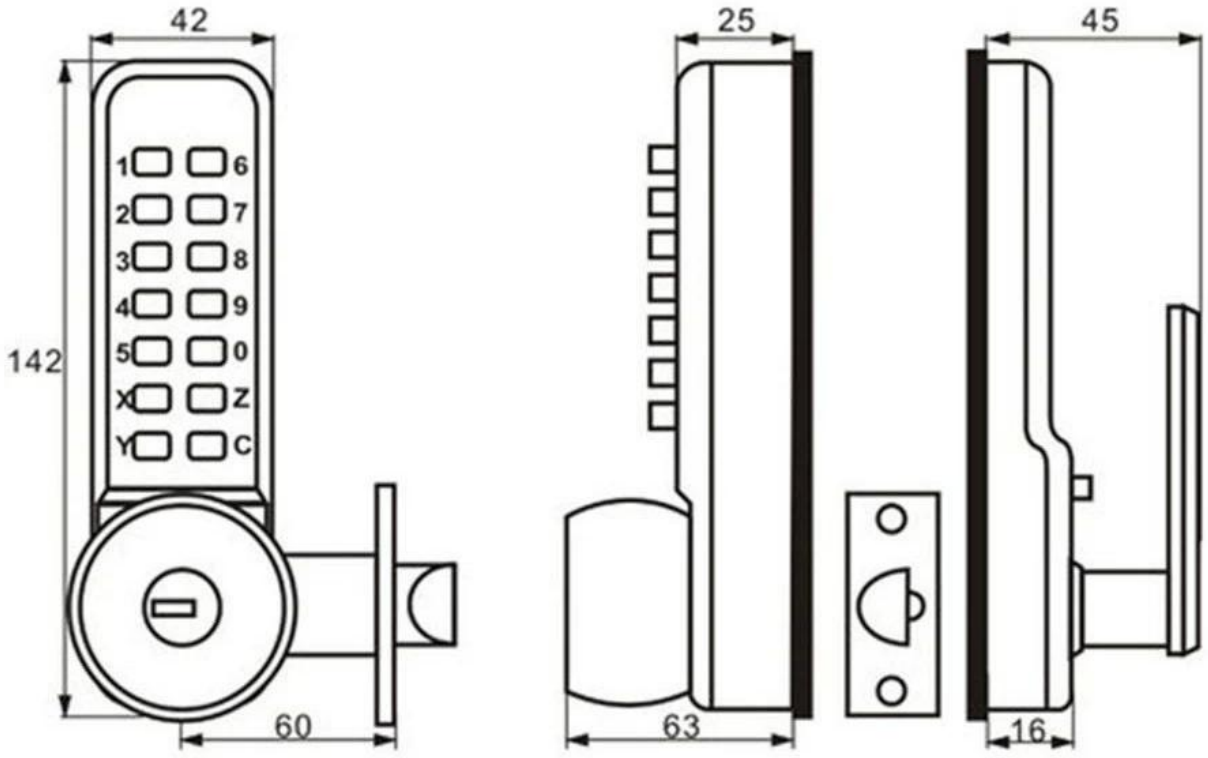

Product has the function of path constant open and indoor close lock

42
142
1
6
2
7
3
8
4
9
5
0
X
Z
Y
C
60
25
63
45
16

特征：

-时尚，紧凑的设计-无钥匙，智能，高安全性，艺术性。

-耐用的锌合金板和手柄；不锈钢内部配件

-[illegible]
-[illegible]
-[illegible]
-[illegible]35mm[illegible]60mm[illegible]